CM6032V201R-10

UNCONTROLLED DOCUMENT

PHYSICAL DIMENSIONS:

A	15.24 [.600]	± 0.23 [.009]	
B	8.13 [.320]	± 0.13 [.005]	
B_1	10.92 [.430]	MAX	
C	9.45 [.372]	± 0.15 [.006]	
C_1	10.08 [.397]	MAX	
D	4.06 [.160]	± 0.05 [.002]	
E	1.27 [.050]	± 0.13 [.005]	
E_1	2.03 [.080]	± 0.13 [.005]	

WIRE DIMENSIONS:

T_1	3.30 [.130]	± 0.38 [.015]	
T_2	0.64 [.025]	TYP	
T_3	0.38 [.015]	TYP	

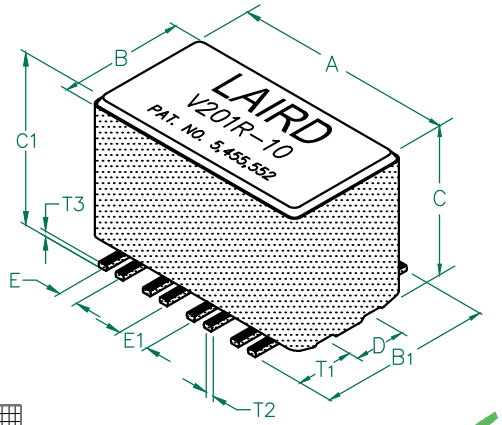

ELECTRICAL CHARACTERISTICS:

	Z @ 100MHz (Ω)	DCR (Ω)	Rated Current
Nominal	200		
Minimum	150		
Maximum	250	0.01	8,000 mA

NOTES: UNLESS OTHERWISE SPECIFIED

1. TAPED AND REELED per CURRENT EIA SPECIFICATIONS 13" REELS, 250 PCS/REEL.
2. COMPONENTS SHOULD BE ADEQUATELY PREHEATED BEFORE SOLDERING.
3. REF. CARRIER TAPE SPECIFICATION # CART6032-23.
4. TERMINATION FINISH IS 100% TIN.
5. THIS PART HAS NO PIN POLARITY.
6. OPERATION TEMPERATURE (INCLUDING SELF-HEATING): -40 ~ +125°C.

RoHS

Z vs. FREQUENCY (C,O,N)

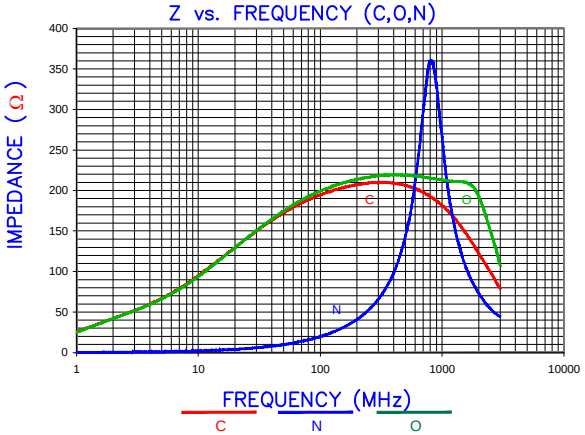

Z, R , XL vs. FREQUENCY

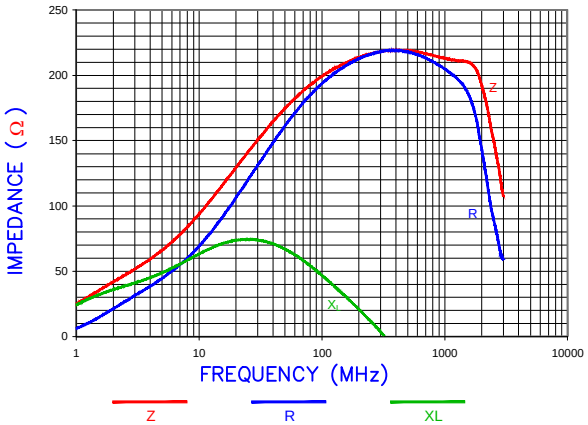

AGILENT E4991A RF Impedance/Material Analyzer
HP 16194A Test Fixture. TEST REF. 3007

LAND PATTERNS FOR REFLOW SOLDERING

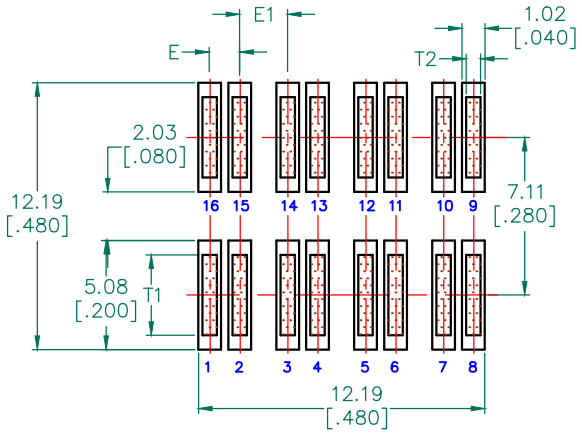

RECOMMENDED SOLDERING CONDITIONS

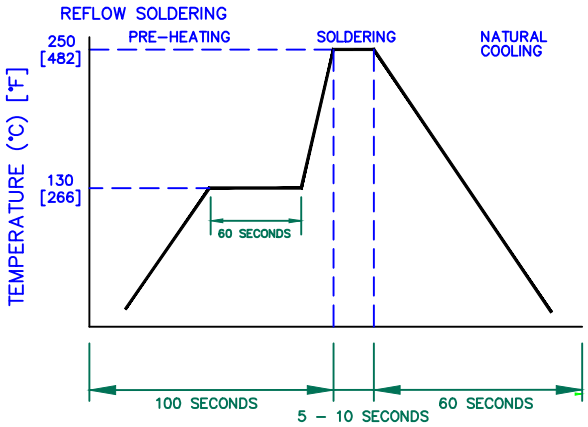

EQUIVALENT CIRCUIT
NO POLARITY

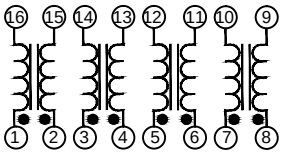

DIMENSIONS ARE IN mm [INCHES]

REV	DESCRIPTION	DATE	
E	UPDATE LOGO AND NOTE 6	08/30/12	QIU
D	UPDATE COMPANY LOGO & KAPTON LABEL ADD EQUIVALENT CIRCUIT	11/12/08	JRK
C	UPDATE COMPANY LOGO	01/08/08	JRK
B	CORRECT REV BLOCK mm [INCHES]	10/20/06	JRK
A	ORIGINAL DRAFT	06/11/04	JRK

This print is the property of Laird Tech. and is loaned in confidence subject to return upon request and with the understanding that no copies shall be made without the written consent of Laird Tech. All rights to design or invention are reserved.

Laird

PROJECT/PART NUMBER: CM6032V201R-10	REV: E	DRAWN BY: JRK	
DATE: 06/11/04	SCALE: NTS	SHEET: 1 of 2	
CAD # CM6032V201R-10-E-1	TOOL # H0600-200		